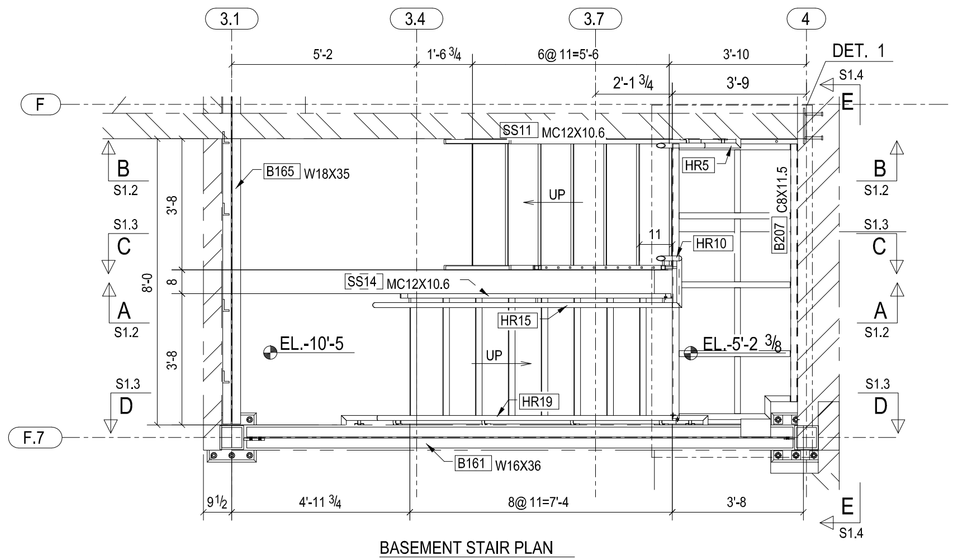

BASEMENT STAIR PLAN

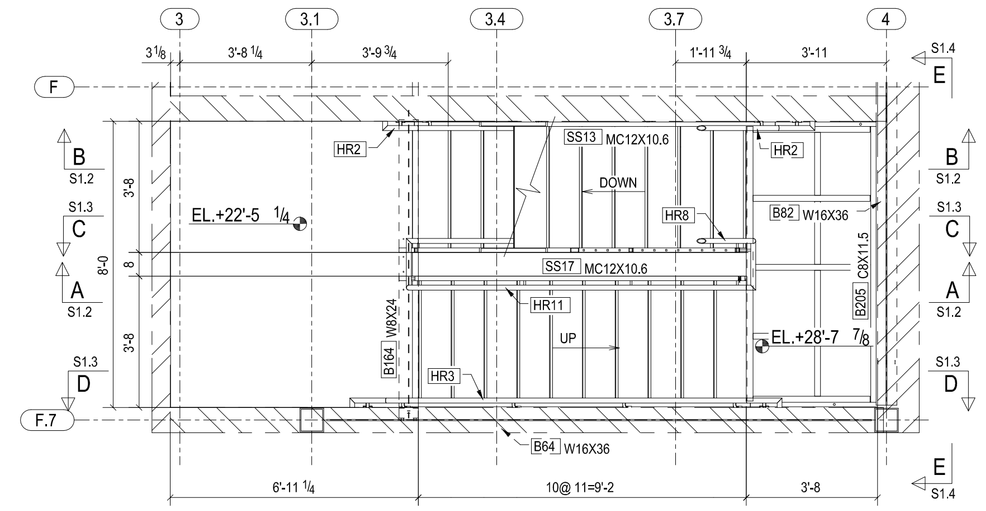

THIRD FLOOR STAIR PLAN

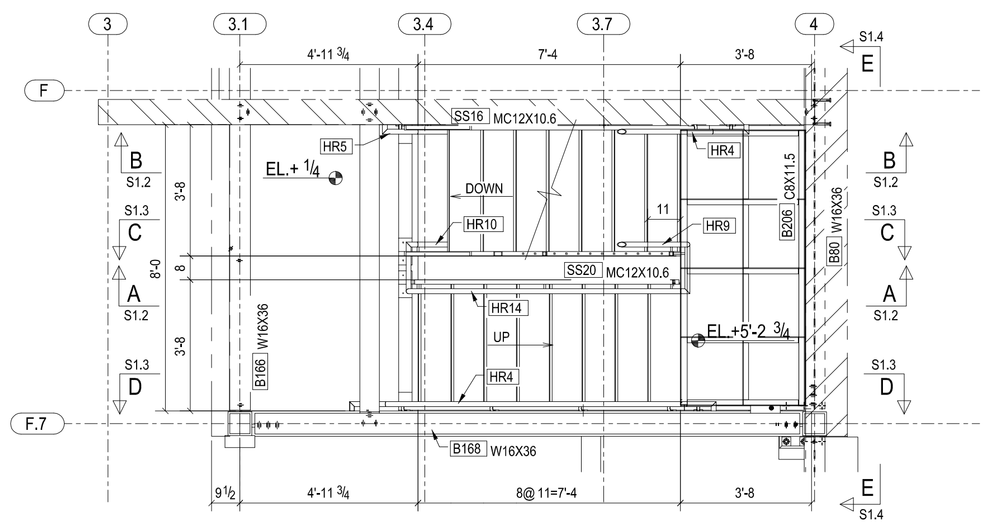

FIRST FLOOR STAIR PLAN

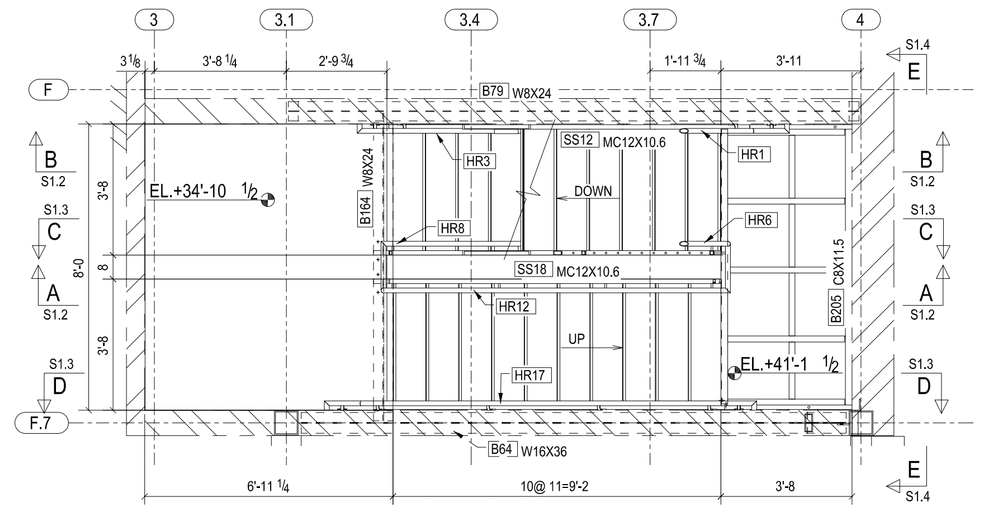

FOURTH FLOOR STAIR PLAN

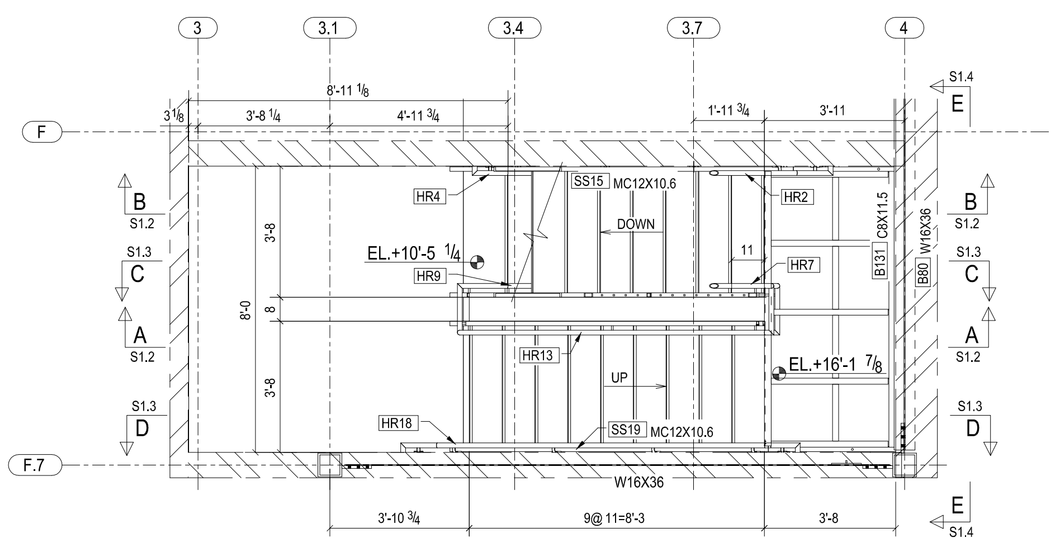

SECOND FLOOR STAIR PLAN

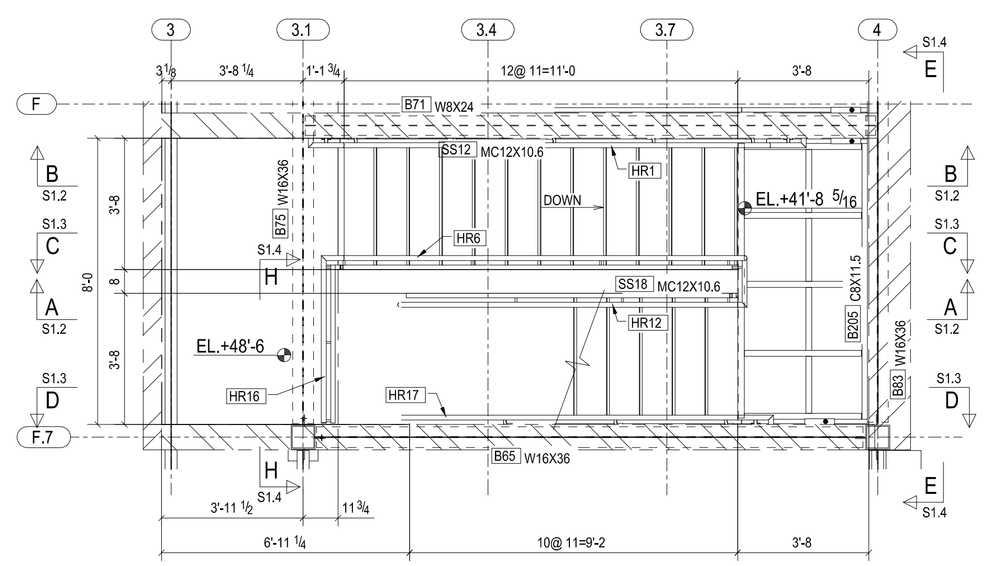

ROOF STAIR PLAN

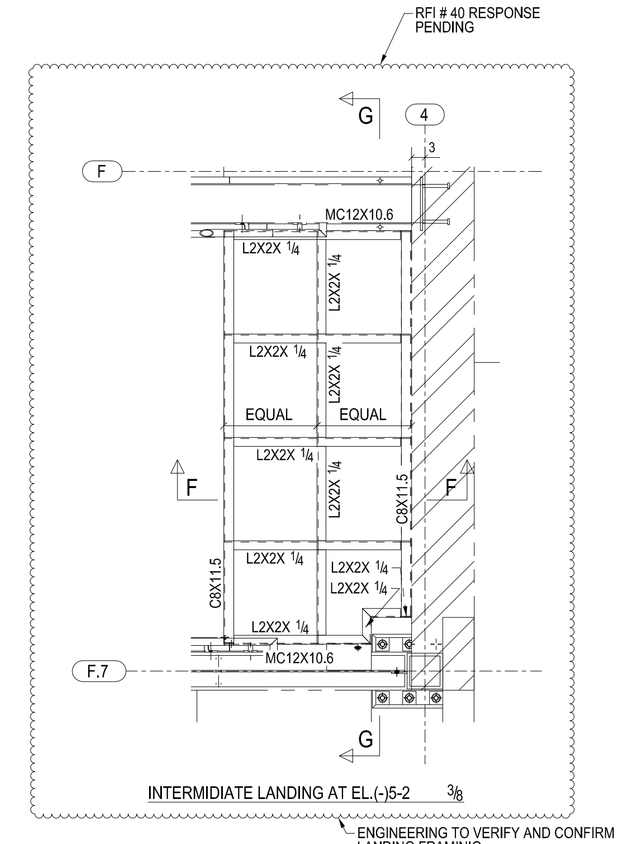

INTERMIDIATE LANDING AT EL.(-)5-2 3/8

ENGINEERING TO VERIFY AND CONFIRM LANDING FRAMINIG

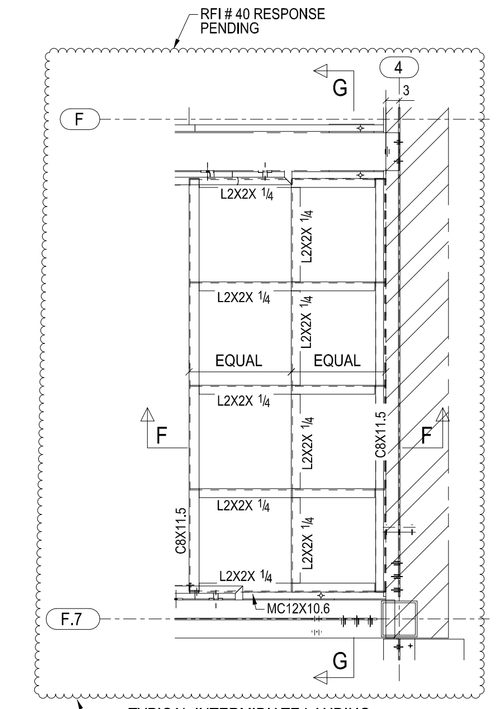

TYPICAL INTERMIDIATE LANDING

ENGINEERING TO VERIFY AND CONFIRM LANDING FRAMINIG

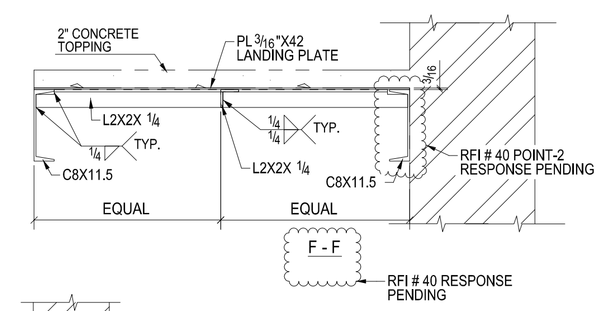

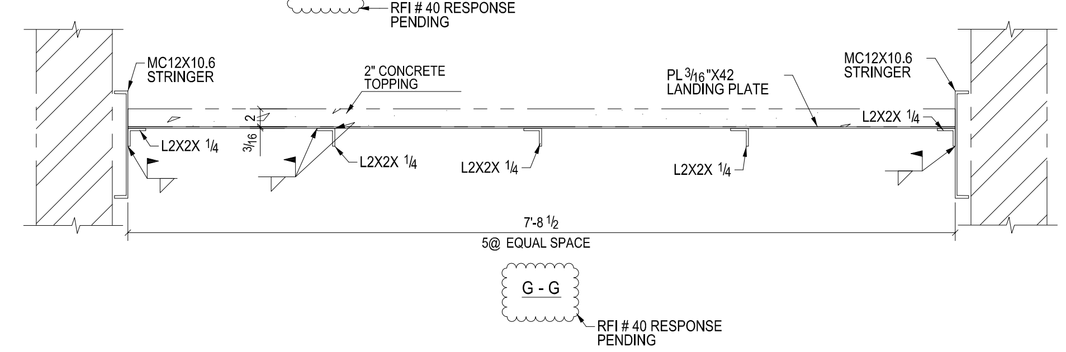

ENGINEER TO VERIFY CLOUDED ITEMS

REV.	DESCRIPTION	DATE	DWN	CHK
A	FOR APPROVAL		AP	NJ

GENERAL NOTES

MATERIAL: --

HOLES: 3/4 DIA. U/N | CONN'S.: ASTM A325 | ELECTRODES : E70XX U/N

SURFACE PREP. AND PAINT: SSPC-SP6 ONE COAT OF SHOP PRIMER U.N.O.

REF. DRG.

DESCRIPTION: Stair Layout & Details

PROJECT NAME
LOCATION

DRAWN BY HP

DRAWING FILE MODEFY:		DATE	
DRAWN BY	AP	DATE	
CHED. BY	NJ	DATE	
JOB No.		DRG. No. S1.1	REV. A