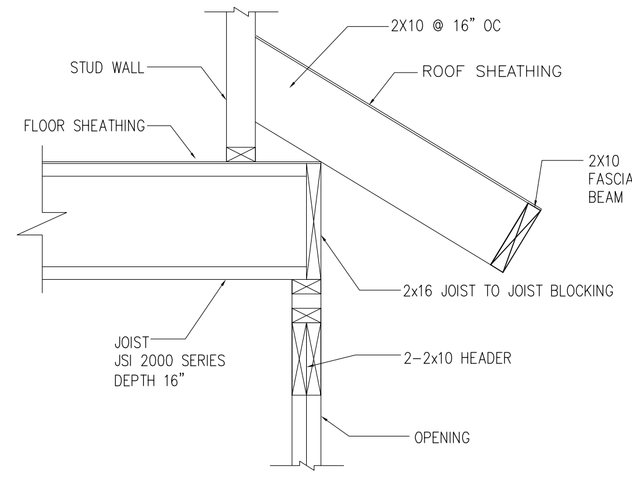

1 S.04 SECTION

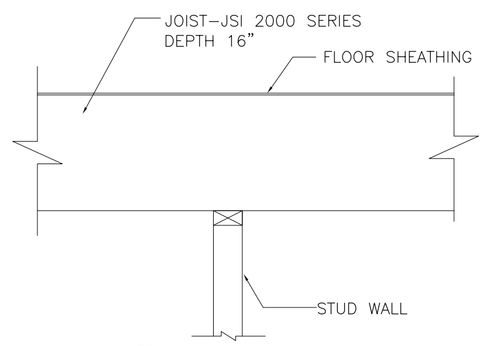

5 S.04 SECTION

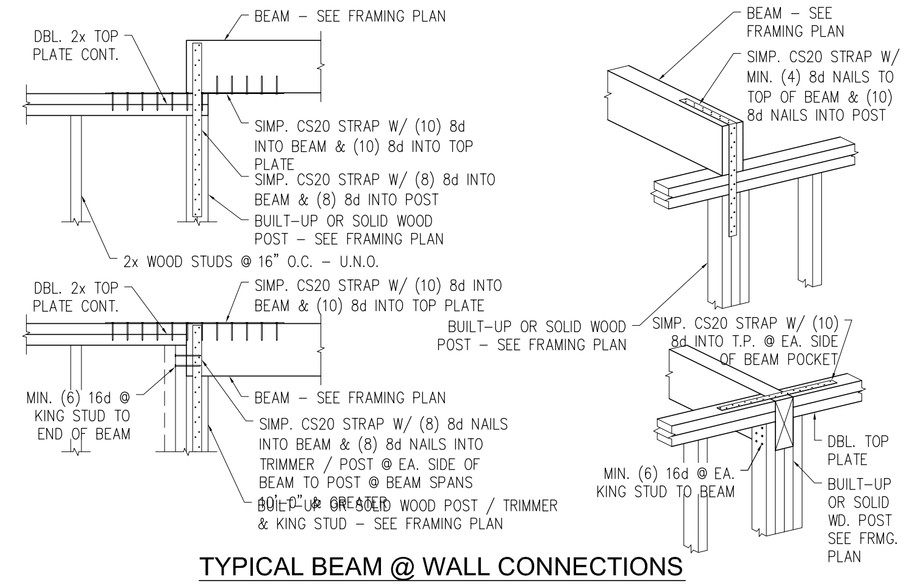

TYPICAL BEAM @ WALL CONNECTIONS

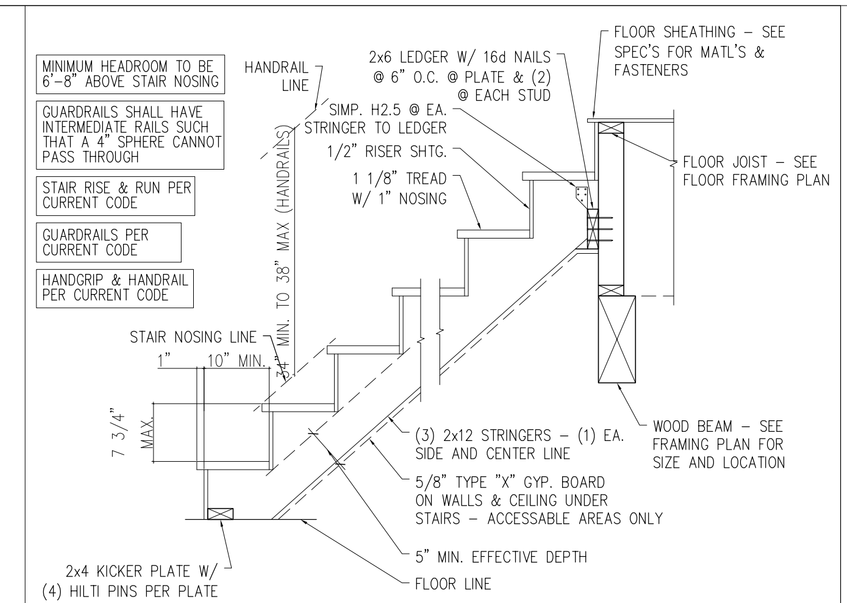

TYPICAL STAIR BOTTOM & TOP CONNECTIONS

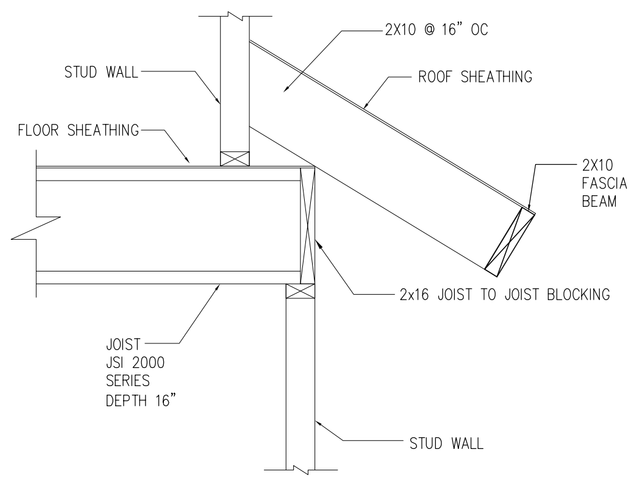

2 S.04 SECTION
SCALE : 1" = 1'

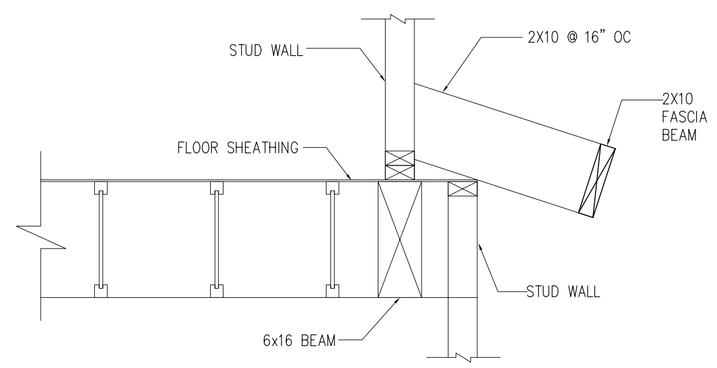

6 S.04 SECTION
SCALE : 1" = 1'

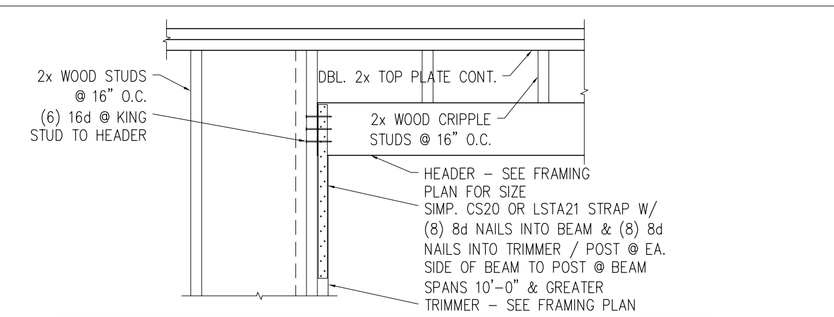

		NUMBER OF KING STUDS REQUIRED			
	OPENING WIDTH	8'-1" PLATE	9'-1" PLATE	10'-1" PLATE	12'-1" PLATE
2x4 STUD WALL	UP TO 3'-0"	1	1	1	
	4'-0"	1	1	1	
	5'-0"	1	1	2	
	6'-0"	1	2	2	
	8'-0"	2	2	2	
	12'-0"	2	2	3	
2x6 STUD WALL	UP TO 3'-0"	1	1	1	1
	4'-0"	1	1	1	1
	5'-0"	1	1	1	1
	6'-0"	1	1	1	1
	8'-0"	1	1	1	2
	12'-0"	2	2	2	2

TYPICAL WINDOW AND/OR DOOR HEADER

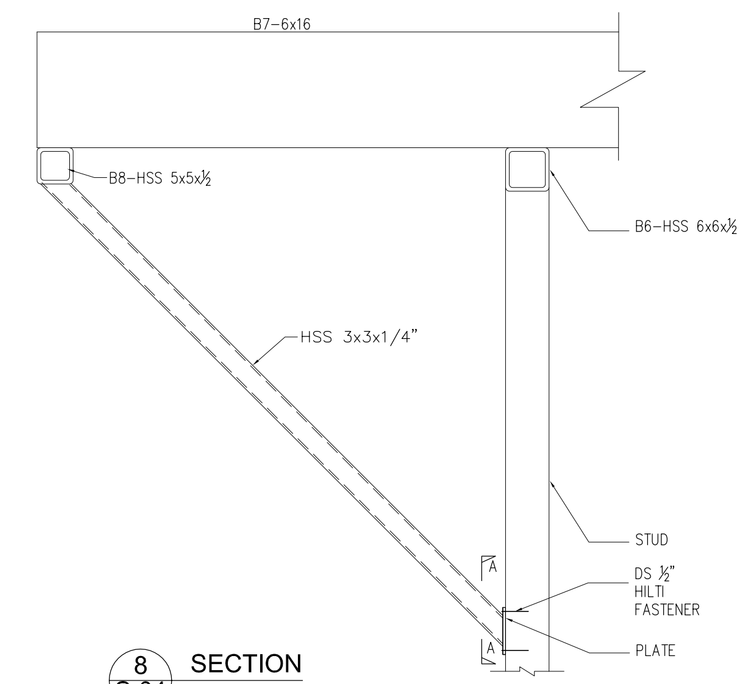

8 S.04 SECTION

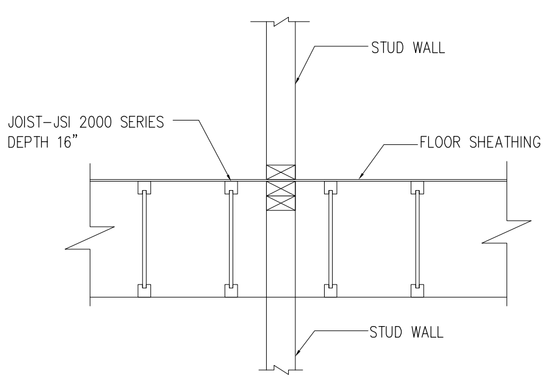

3 S.04 SECTION
SCALE :1" = 1'

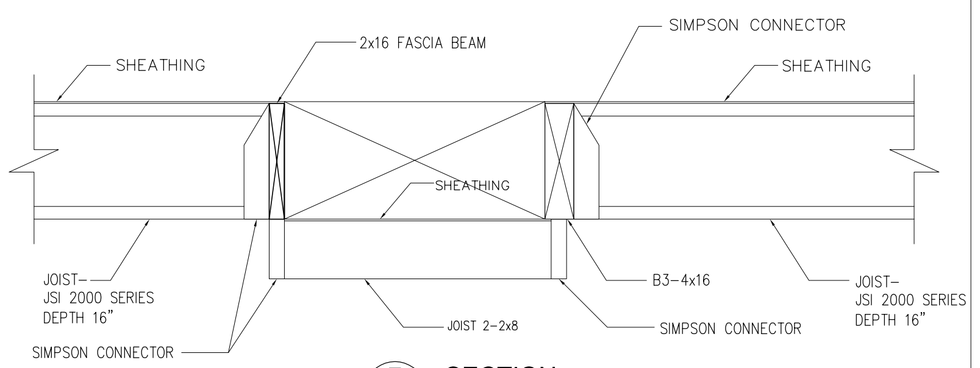

7 S.04 SECTION
SCALE : 1" = 1'

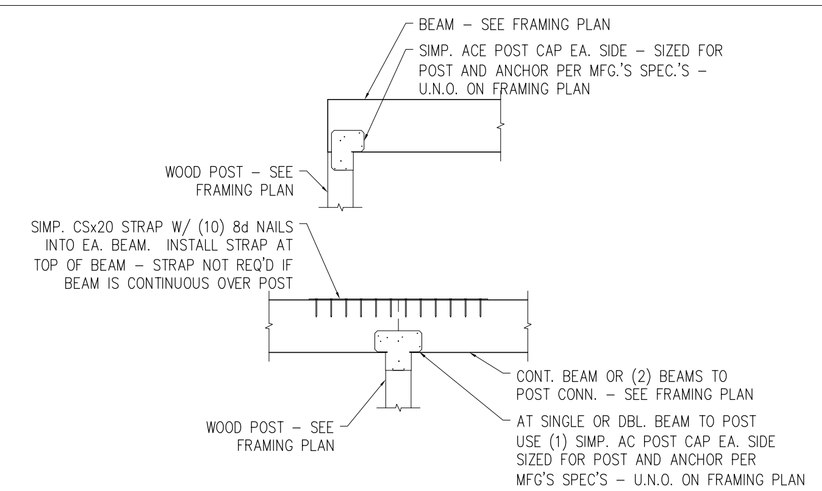

TYPICAL BEAM @ POST CONNECTIONS

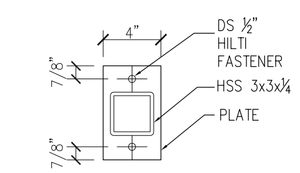

A SECTION

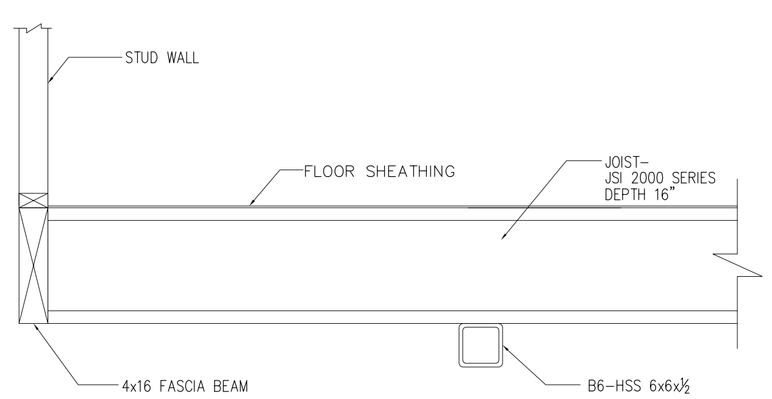

4 S.04 SECTION

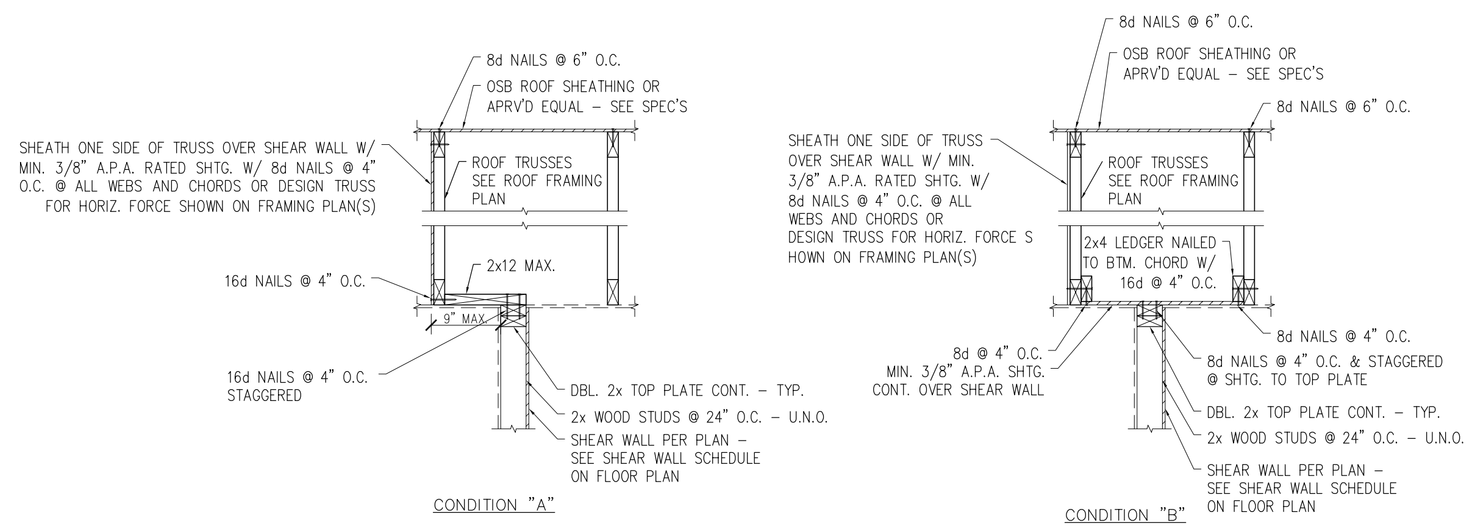

TYPICAL TRUSSES / WALL / SHEAR TRANSFER CONDITIONS

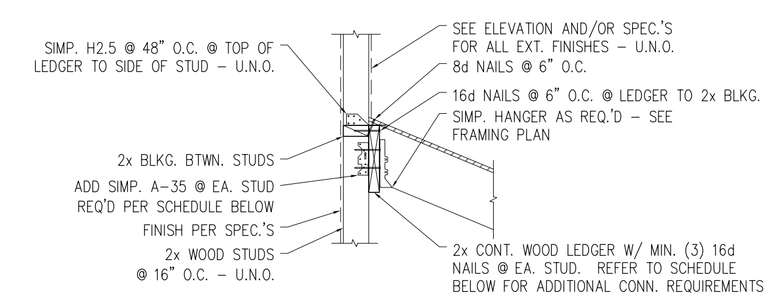

RAFTER / TRUSS SPAN	ROOFS LEDGER SIZE & CONN.	WALK DECKS LEDGER SIZE & CONN.
0'-0" TO 10'-0"	2x6 CONT. WOOD LEDGER W/ (3) 16d NAILS @ EACH STUD	2x8 CONT. WOOD LEDGER W/ (5) 16d NAILS @ EACH STUD
10'-1" TO 13'-0"	2x8 CONT. WOOD LEDGER W/ (4) 16d NAILS @ EACH STUD	2x8 CONT. WOOD LEDGER W/ (4) 16d NAILS @ EACH STUD W/ (1) SIMP. A35 @ EA. STUD
13'-1" TO 15'-0" MAX.	2x8 CONT. WOOD LEDGER W/ (4) 16d NAILS @ EACH STUD W/ (1) SIMP. A35 @ EA. STUD	N/A

NOTE:
AT LEDGER SPLICE - USE DBL. STUDS STRAP LEDGER SPLICE W/ SIMPSON CS20 x 18" LONG STRAP

NOTE:
AT GIRDER / BEAM CONNECTION TO LEDGER ADD MULTIPLE STUDS BEHIND LEDGER @ GIRDER / BEAM LOCATION - SEE FRAMING PLAN FOR NUMBER OF STUDS & NUMBER OF NAILS REQUIRED

TYPICAL RAFTERS TO LEDGER @ WALL

3DModel-rvt-WMGroupLogo1-179794.jpg

www.theWMgroup.net

Owner 1
Address
Address
Phone
Fax
e-mail

Owner 2
Address
Address
Phone
Fax
e-mail

Architect
Address
Address
Phone
Fax
e-mail

Consultant
Address
Address
Phone
Fax
e-mail

Consultant
Address
Address
Phone
Fax
e-mail

Consultant
Address
Address
Phone
Fax
e-mail

No.	Description	Date

Upper Framing Details New Duplex

Project number	APN: 094 -0155-003-01
Date	December 2007
Drawn by	Author
Checked by	Checker

S05

Scale 3/4" = 1'-0"

3/12/2007 11:26:28 AM