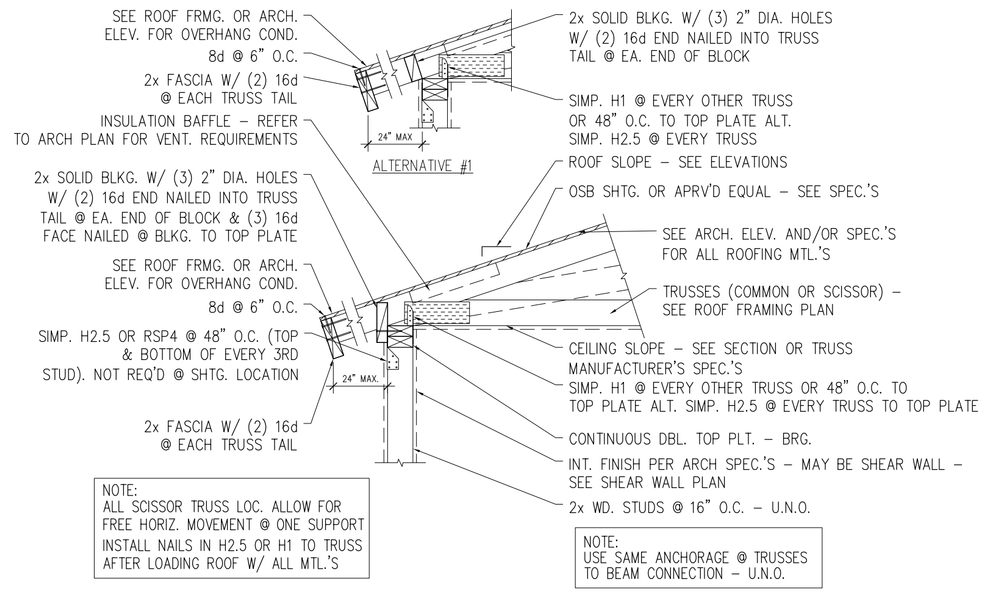

1 S.06 SECTION

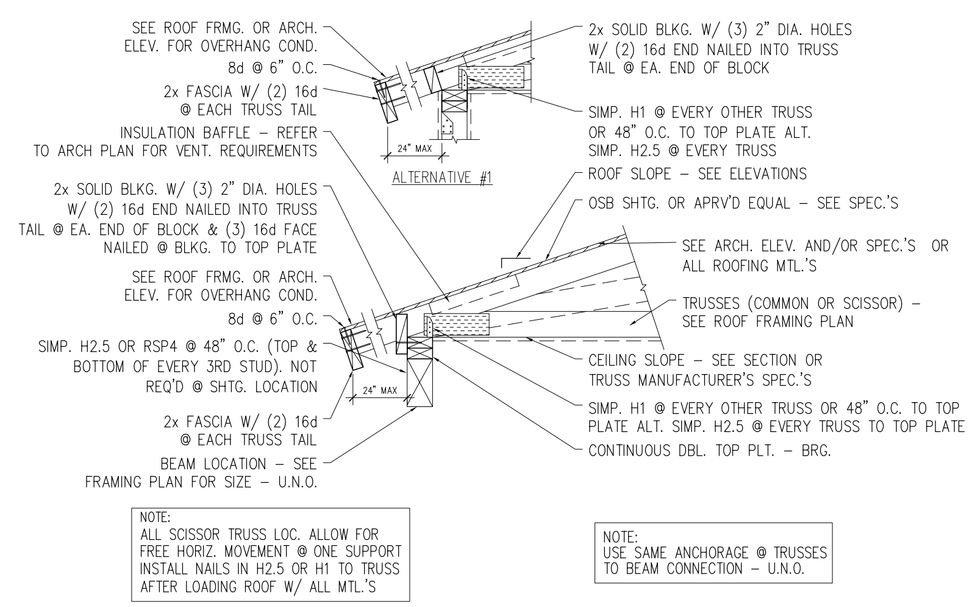

2 S.06 SECTION

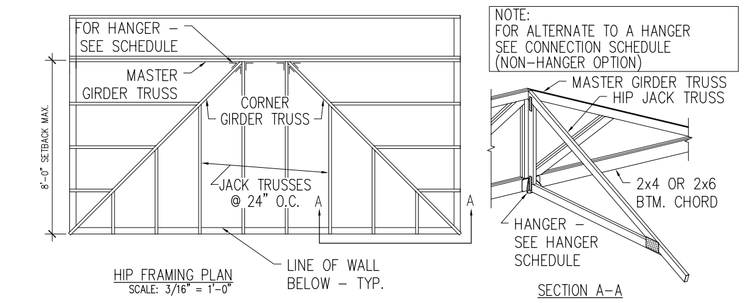

CONNECTION SCHEDULE		
TRUSS CONDITION	HANGER OPTION	NON-HANGER OPTION
6'-0" SETBACK SINGLE MEMBER SPRUCE – PINE – FIR	2x4 BTM. CHORD SIMP. MTHM 2x6 BTM. CHORD SIMP. THJA26 OR SIMP. LTHJ (USE 10d x 1 1/2" NAILS)	(4) 16d NAILS @ TOP & BTM. CHORDS FOR A TOTAL OF (8) NAILS. (4) TOE NAILS & (4) END NAILS –
8'-0" SETBACK SINGLE MEMBER SPRUCE – PINE – FIR	2x4 BTM. CHORD SIMP. MTHM 2x6 BTM. CHORD SIMP. THJA26 OR SIMP. LTHJ (USE 10d x 1 1/2" NAILS)	USE 2x6 x 24" HIGH BRG. BLOCK NAILED TO KING POST OF GIRDER W/ (9) 16d NAILS
6'-0" SETBACK MULT. MEM. 8'-0" SETBACK MULT. MEM. SPRUCE – PINE – FIR	2x4 BTM. CHORD SIMP. MTHM 2x6 BTM. CHORD SIMP. THJA26 OR SIMP. LTHJ (USE 10d x 1 1/2" NAILS)	USE 2x6 x 24" HIGH BRG. BLOCK NAILED TO KING POST OF GIRDER W/ (9) 16d NAILS
6'-0" TERMINAL HIP 8'-0" TERMINAL HIP SPRUCE – PINE – FIR	2x4 BTM. CHORD SIMP. LTHMA @ 6'-0" TERMINAL HIP FILL ALL 'ROUND' HOLES	USE 2x6 x 24" HIGH BRG. BLOCK NAILED TO KING POST OF GIRDER W/ (14) 16d NAILS – SEE DETAIL 8
	2x4 BTM. CHORD SIMP. MTHM @ 8'-0" TERMINAL HIP FILL ALL 'ROUND' HOLES	
	2x6 BTM. CHORD SIMP. THJA26 BEND CENTER TAB DOWN FOR CENTER JACK	

TYPICAL ALT. HANGER OPTIONS

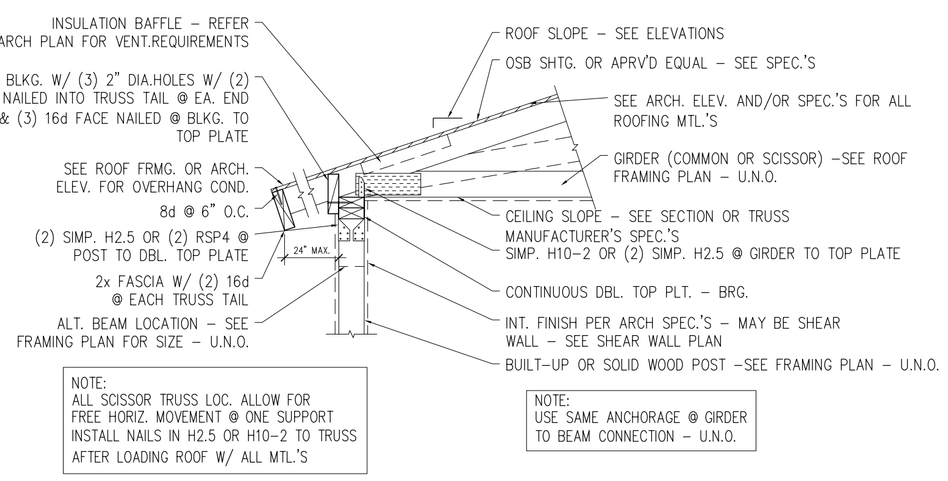

TYPICAL GIRDER TRUSS @ WALL (@ BEAM SIM.)

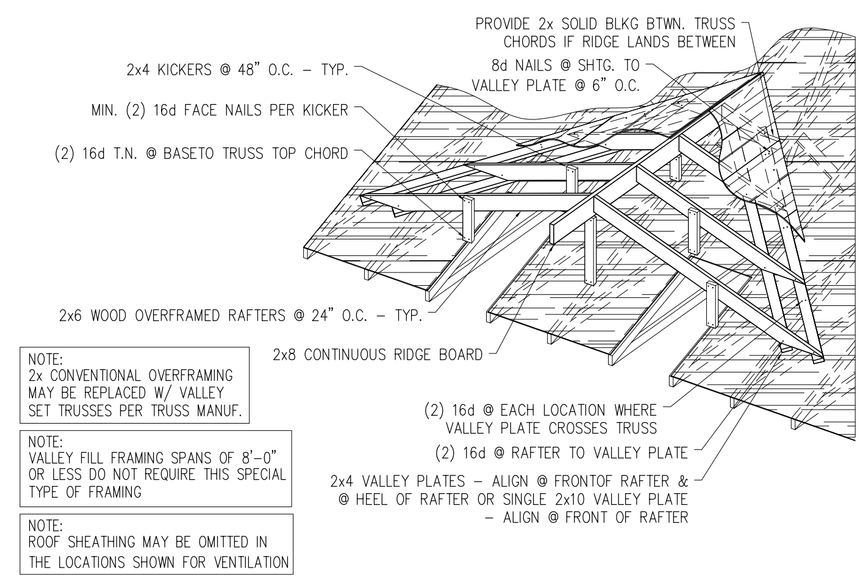

SUPPORT OF VALLEY RAFTERS AT OVERFRAMED ROOF

3DModel–rvt–WMGroupLogo1–179794.jpg

www.theWMgroup.net

Owner 1
Address
Address
Phone
Fax
e-mail

Owner 2
Address
Address
Phone
Fax
e-mail

Architect
Address
Address
Phone
Fax
e-mail

Consultant
Address
Address
Phone
Fax
e-mail

Consultant
Address
Address
Phone
Fax
e-mail

Consultant
Address
Address
Phone
Fax
e-mail

No.	Description	Date

Roof Framing Details New Duplex

Project number	APN: 094 -0155-003-01
Date	December 2007
Drawn by	Author
Checked by	Checker

S.07

Scale 3/4" = 1'-0"

3/12/2007 11:26:28 AM