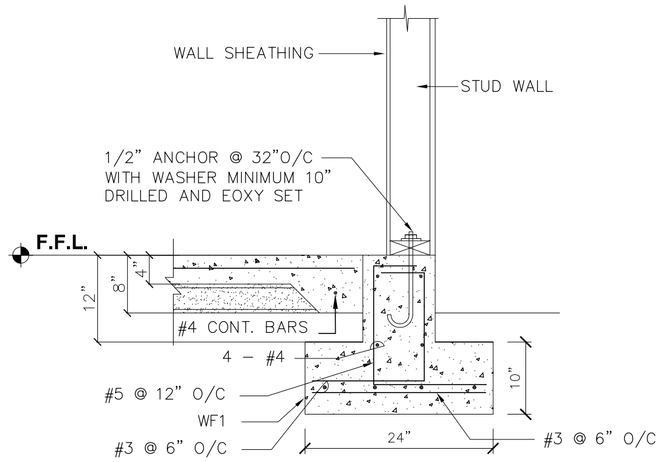

1 S.02 EXTERNAL WALL FOOTING

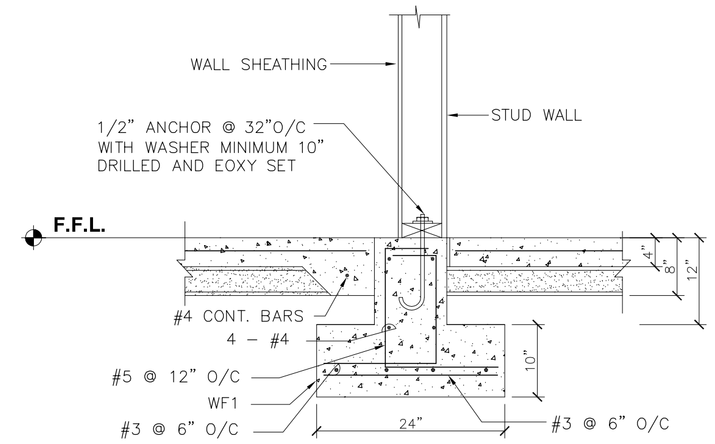

2 S.02 INTERNAL WALL FOOTING

NOTES:

1. SHEATHING 3/8" OSB w/ 8d @ 4 O.C.
2. DBL 2x OR 4x AT HOLDOWN
3. HOLDOWN – SIMPSON PER SCHEDULE
4. ANCHOR BOLTS AT 1/3 POINTS
5. 2x SOLE PLATE (TREATED)
6. 1 #4 BAR CONT T&B
7. CONT SPREAD FTG
8. CONT STEM WALL
9. 2x4 STUDS @ 12" O.C. AND ALL SHEATHING EDGES TO BE BLOCKED w/ 3x
10. SIMPSON MST148
11. SIMPSON CMSTC16 w/ 25" END LENGTH
12. HEADER – PER PLAN

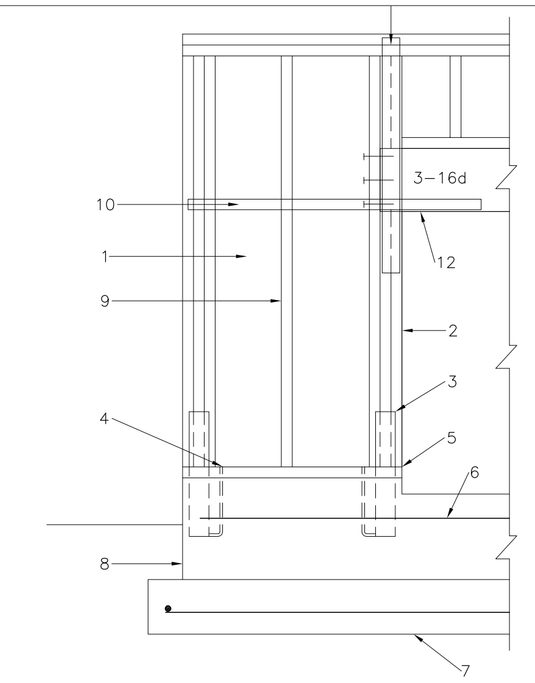

3 S.02 STRONG WALL ON GARAGE

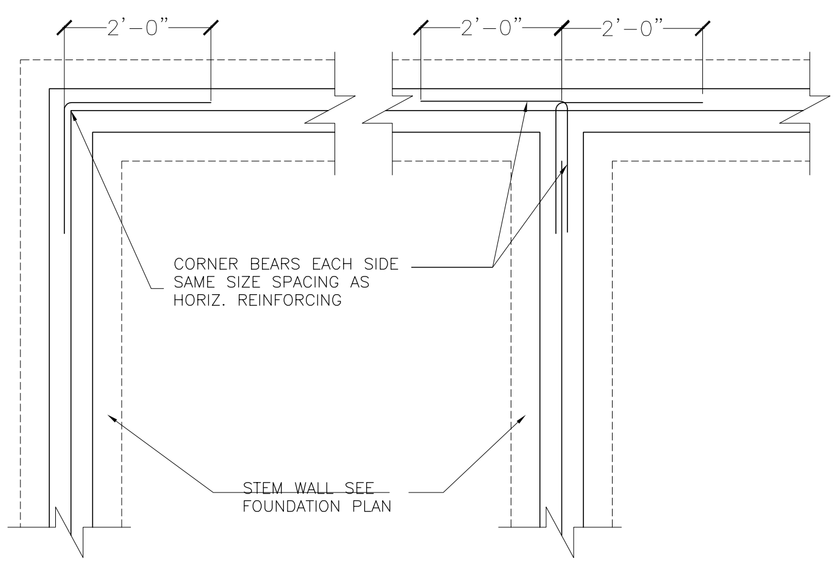

TYPICAL FOUNDATION REINF. DETAIL

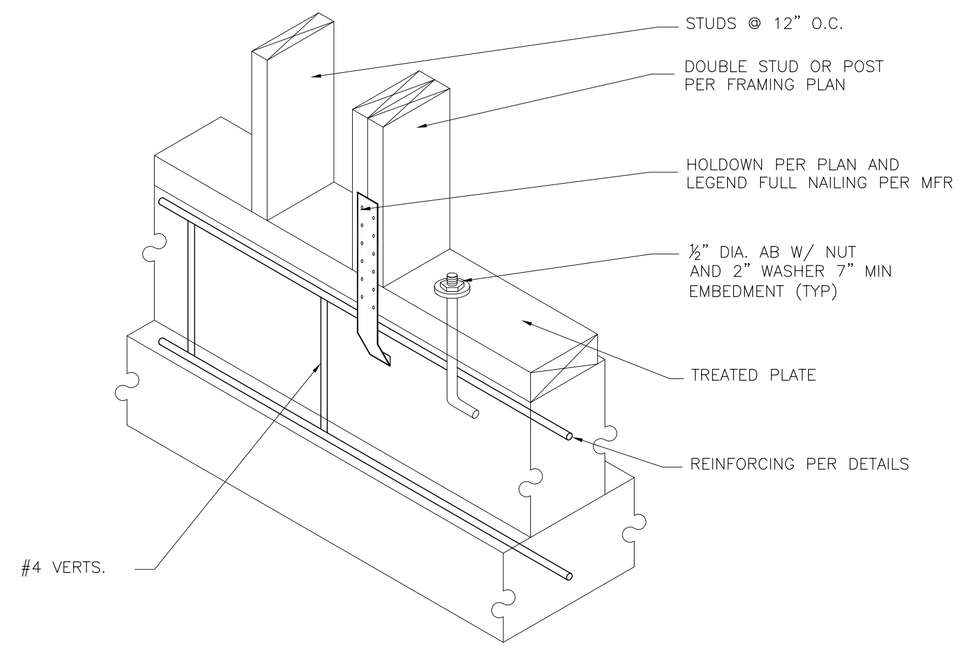

TYPICAL HOLDDOWN CONN. ON FTG.

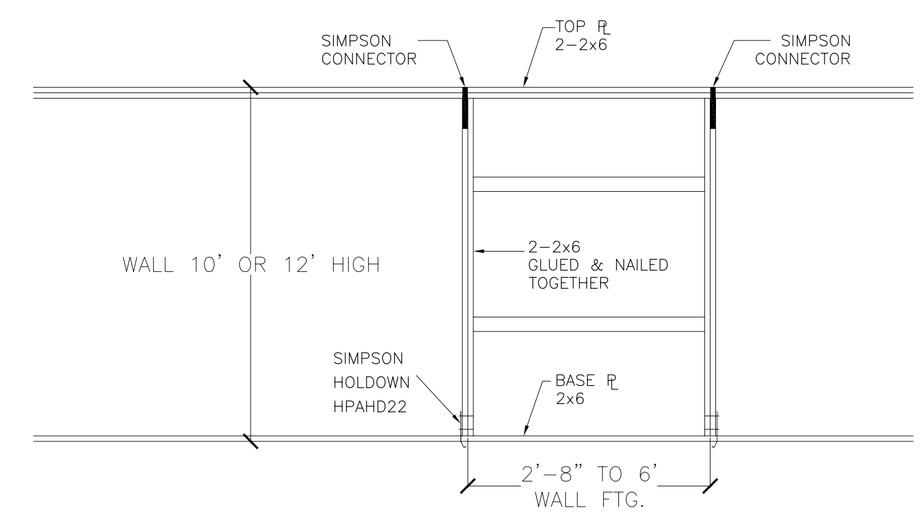

TYPICAL PANELS HOLDOWNS

3DModel–rvt–WMGroupLogo1–179794.jpg

www.theWMgroup.net

Owner 1
Address
Address
Phone
Fax
e-mail

Owner 2
Address
Address
Phone
Fax
e-mail

Architect
Address
Address
Phone
Fax
e-mail

Consultant
Address
Address
Phone
Fax
e-mail

Consultant
Address
Address
Phone
Fax
e-mail

Consultant
Address
Address
Phone
Fax
e-mail

No.	Description	Date

Foundation Details New Duplex

Project number	APN: 094 -0155-003-01
Date	December 2007
Drawn by	Author
Checked by	Checker

S.03

Scale 3/4" = 1'-0"

3/12/2007 11:26:28 AM